BF2600A230

SCHÜTZ BF2600A, 3P, 26A AC3, 230V 50/60HZ

Product designation			Power contactor
Product type designation			BF26
Contact characteristics			
Number of poles		Nr.	3
Rated insulation voltage Ui IEC/EN		V	690
Rated impulse withstand voltage Uimp		kV	6
Operational frequency			
	min	Hz	25
	max	Hz	400
IEC Conventional free air thermal current Ith		A	45
Operational current Ie			
	AC-1 (≤40°C)	A	45
	AC-1 (≤55°C)	A	36
	AC-1 (≤70°C)	A	32
	AC-3 (≤440V ≤55°C)	A	26
	AC-4 (400V)	A	11.5
Rated operational power AC-3 (T≤55°C)			
	230V	kW	7.3
	400V	kW	13
	415V	kW	14
	440V	kW	14
	500V	kW	15.6
	690V	kW	18.5
Rated operational power AC-1 (T≤40°C)			
	230V	kW	17
	400V	kW	30
	500V	kW	37
	690V	kW	51
IEC max current Ie in DC1 with L/R ≤ 1ms with 1 poles in series			
	≤24V	A	25
	48V	A	21
	75V	A	18
	110V	A	6
	220V	A	–
IEC max current Ie in DC1 with L/R ≤ 1ms with 2 poles in series			
	≤24V	A	28
	48V	A	28
	75V	A	25
	110V	A	22
	220V	A	2
IEC max current Ie in DC1 with L/R ≤ 1ms with 3 poles in series			
	≤24V	A	28
	48V	A	28
	75V	A	25
	110V	A	24

	220V	A	20
IEC max current Ie in DC1 with L/R ≤ 1ms with 4 poles in series			
	≤24V	A	28
	48V	A	28
	75V	A	25
	110V	A	24
	220V	A	26
IEC max current Ie in DC3-DC5 with L/R ≤ 15ms with 1 poles in series			
	≤24V	A	18
	48V	A	15
	75V	A	13
	110V	A	2
	220V	A	–
IEC max current Ie in DC3-DC5 with L/R ≤ 15ms with 2 poles in series			
	≤24V	A	20
	48V	A	20
	75V	A	18
	110V	A	13
	220V	A	3
IEC max current Ie in DC3-DC5 with L/R ≤ 15ms with 3 poles in series			
	≤24V	A	25
	48V	A	25
	75V	A	20
	110V	A	18
	220V	A	19
IEC max current Ie in DC3-DC5 with L/R ≤ 15ms with 4 poles in series			
	≤24V	A	30
	48V	A	30
	75V	A	25
	110V	A	20
	220V	A	15
Short-time allowable current for 10s (IEC/EN60947-1)		A	210
Protection fuse			
	gG (IEC)	A	50
	aM (IEC)	A	32
Making capacity (RMS value)		A	260
Breaking capacity at voltage			
	440V	A	208
	500V	A	184
	690V	A	168
Resistance per pole (average value)		mΩ	2
Power dissipation per pole (average value)			
	Ith	W	4
	AC-3	W	1.4
Tightening torque for terminals			
	min	Nm	2.5
	max	Nm	3
	min	Ibin	1.8
	max	Ibin	2.2
Tightening torque for coil terminal			
	min	Nm	0.8
	max	Nm	1
	min	Ibin	0.8

	max	Ibin	0.74
Max number of wires simultaneously connectable		Nr.	2
Conductor section			
AWG/Kcmil			
	max		6
Flexible w/o lug conductor section			
	min	mm²	2.5
	max	mm²	16
Flexible c/w lug conductor section			
	min	mm²	1
	max	mm²	10
Flexible with insulated spade lug conductor section			
	min	mm²	1
	max	mm²	10
Power terminal protection according to IEC/EN 60529			IP20 when properly wired
Mechanical features			
Operating position			
	normal		Vertical plan
	allowable		±30°
Fixing			Screw / DIN rail 35mm
Weight		g	424
Conductor section			
AWG/kcmil conductor section			
	max		6
Operations			
Mechanical life		cycles	20000000
Electrical life		cycles	1600000
Safety related data			
Performance level B10d according to EN/ISO 13489-1			
	rated load	cycles	1600000
	mechanical load	cycles	20000000
Mirror contats according to IEC/EN 609474-4-1			yes
EMC compatibility			yes
AC coil operating			
Rated AC voltage at 50/60Hz		V	230
AC operating voltage			
of 50/60Hz coil powered at 50Hz			
pick-up			
	min	%Us	80
	max	%Us	110
drop-out			
	min	%Us	20
	max	%Us	55
of 50/60Hz coil powered at 60Hz			
pick-up			
	min	%Us	85
	max	%Us	110
drop-out			
	min	%Us	20
	max	%Us	55
AC average coil consumption at 20°C			
of 50/60Hz coil powered at 50Hz			

		in-rush	VA	75
		holding	VA	9
	of 50/60Hz coil powered at 60Hz			
		in-rush	VA	70
		holding	VA	6.5
	of 60Hz coil powered at 60Hz			
		in-rush	VA	75
		holding	VA	9
Dissipation at holding ≤20°C 50Hz			W	2.5
Max cycles frequency				
Mechanical operation			cycles/h	3600
Operating times				
Average time for Us control				
	in AC			
		Closing NO		
		min	ms	8
		max	ms	24
		Opening NO		
		min	ms	5
		max	ms	15
		Closing NC		
		min	ms	9
		max	ms	20
		Opening NC		
		min	ms	9
		max	ms	17
UL technical data				
Full-load current (FLA) for three-phase AC motor				
		at 480V	A	21
		at 600V	A	22
Yielded mechanical performance				
	for single-phase AC motor			
		110/120V	HP	2
		230V	HP	5
	for three-phase AC motor			
		200/208V	HP	7.5
		220/230V	HP	7.5
		460/480V	HP	15
		575/600V	HP	20
General USE				
	Contactor			
		AC current	A	45
Short-circuit protection fuse, 600V				
	High fault			
		Short circuit current	kA	100
		Fuse rating	A	100
		Fuse class		J
	Standard fault			
		Short circuit current	kA	5
		Fuse rating	A	100
Ambient conditions				
Temperature				
	Operating temperature			
		min	°C	-50

	max	°C	70
Storage temperature			
	min	°C	-60
	max	°C	80
Max altitude		m	3000

Resistance & Protection

Pollution degree	3

Dimensions

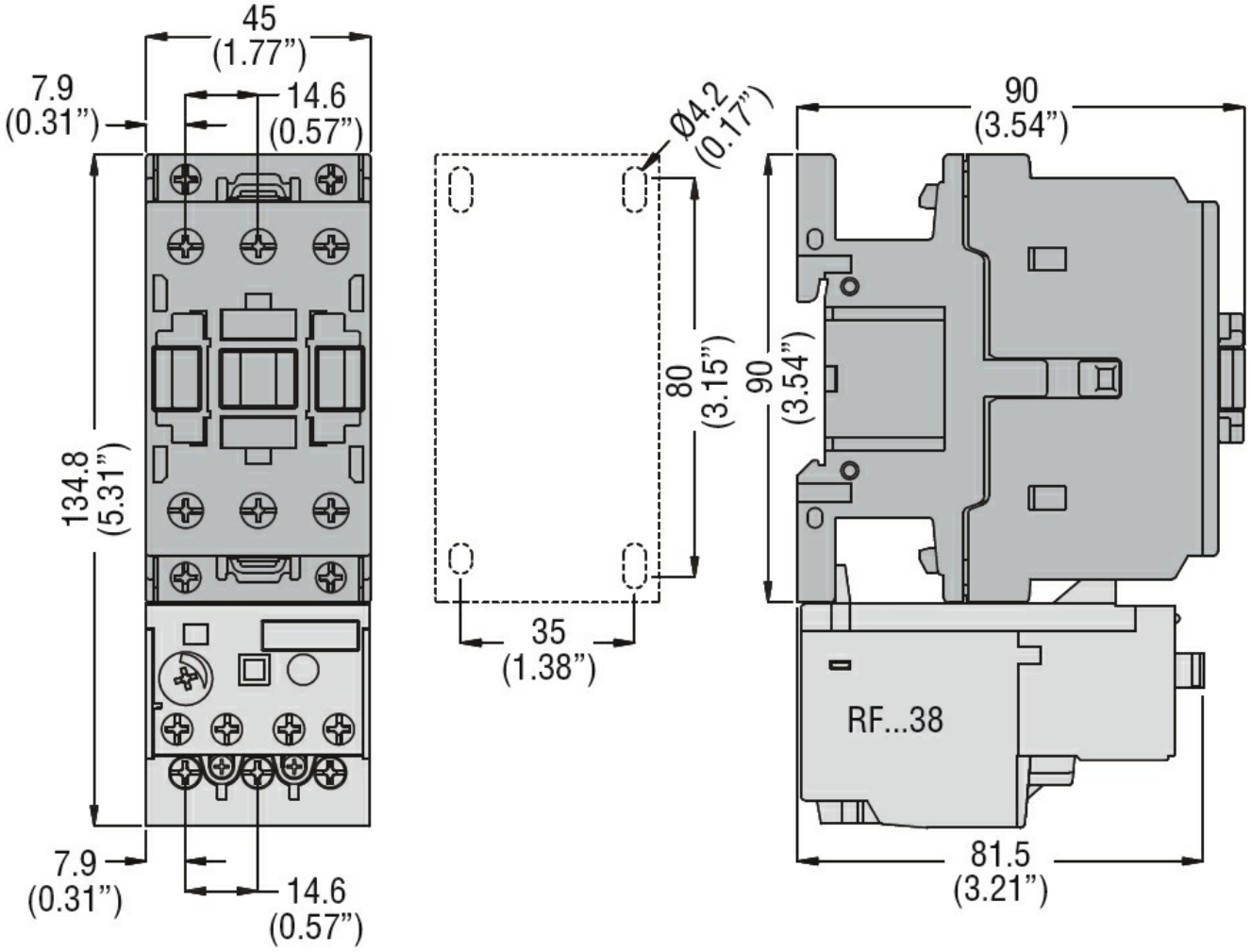

Wiring diagrams

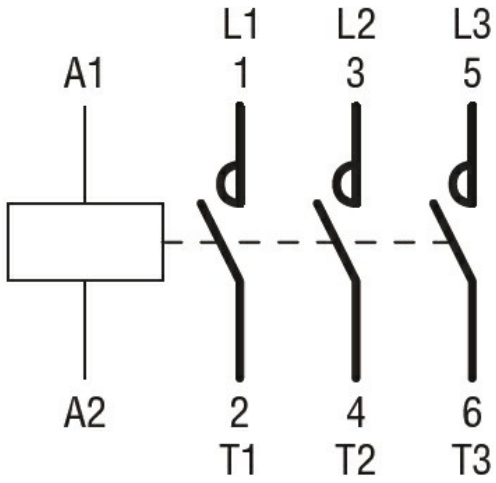

Certifications and compliance

Compliance	
	CSA C22.2 n° 60947-1
	CSA C22.2 n° 60947-4-1
	IEC/EN/BS 60947-1
	IEC/EN/BS 60947-4-1
	UL 60947-1
	UL 60947-4-1
Certificates	
	CCC
	cULus
	EAC

ETIM classification

ETIM 8.0	EC000066 - Power contactor, AC switching